Bahama®

OPERATING INSTRUCTIONS

LED-LIGHTING | ONE





©Bahama GmbH, Gewerbeparkstr. 34, D-51580 I Reichshof, Germany

BAHAMA®

This manual contains all important information about the LED lighting system of our parasols. Please do not toss this instruction manual. Please keep these instructions in a safe place.

WARNINGS

- Please read these instructions carefully and observe all safety instructions.
- If you have any queries, please contact us.
- Only have any necessary electrical work carried out by an approved specialist company.
- The manufacturer accepts no liability or warranty if the instructions given are not followed.



TABLE OF CONTENTS

Functionality of the remote control 3

Pairing the indirect LED lighting 4
Resetting the controller. 4
Pairing several umbrellas. 4
Pairing multiple umbrellas in one zone and across different zones 4
Pairing the LED spotlight (optional) 5

Connection via WiFi | App 6
Setting up the app 6
Changing the name and image of a "room" 8



©Bahama GmbH, Gewerbeparkstr. 34, D-51580 I Reichshof, Germany

FUNCTIONALITY OF THE REMOTE CONTROL

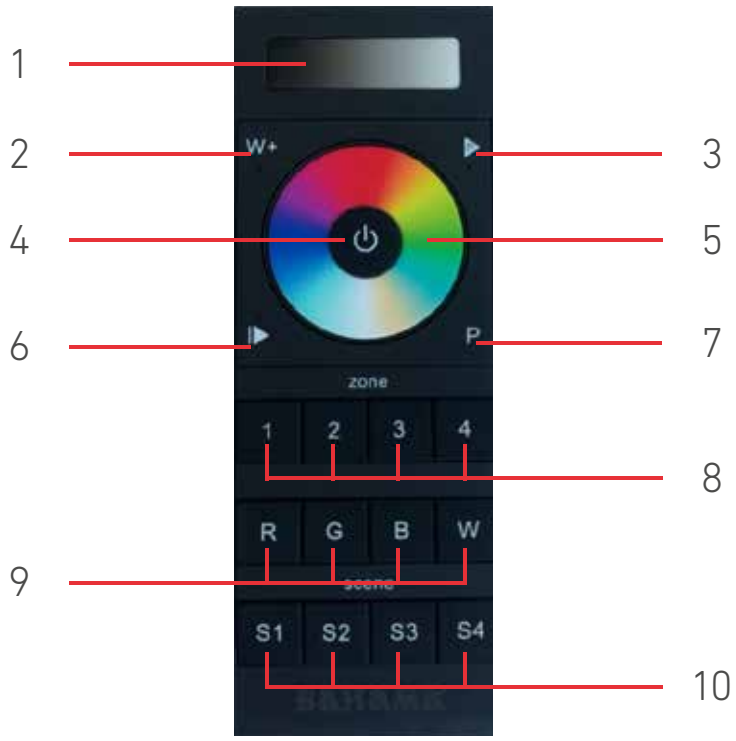

1. Adjust the brightness by slowly swiping or pressing (RGB colors only)
2. Click for warm white, neutral white, cool white
3. Press to play the programmed sequences in the following four ways:
   jump - flashing color change
   fade - faded color change
   flash - white flash light
   strobe - strobe light
4. Switching all zones on and off
5. Color wheel for color selection
6. Play | Pause - for 10 installed programs –
   press and hold to control playback speed
7. Program setting:
   - Press the button - the light in the parasol lights up once
   - now select 2-5 (max. 5) colors using the color selector.
   - Press the button again - the light in the umbrella
     lights up once again, the program has been saved
   - the program can now be called up using the P button
8. Switching the programmed umbrellas on and off separately
   To switch individual zones on or off, press and hold the button for the zone
9. | R-Red | G-Green | B-Blue | W-White | -Channels
   Press to switch the respective channel on and off. Press and hold to adjust the intensity, the first selected color is mixed with the additionally selected color. If this is not desired, the first color must be deselected by pressing it again. Press and hold the W button to dim the white light. To reset the colors: switch off all colors and operate the color wheel. The colors should now be in their factory default form.
10. Press and hold to save colors and settings
    - First select the desired color in the desired brightness.
      To save the selection (scene), press and hold one of the S1-S4 buttons
      until the umbrella flashes once.

©Bahama GmbH, Gewerbeparkstr. 34, D-51580 I Reichshof, Germany

PAIRING THE INDIRECT LED LIGHTING

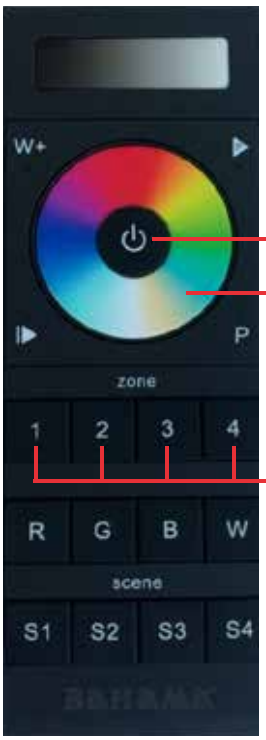

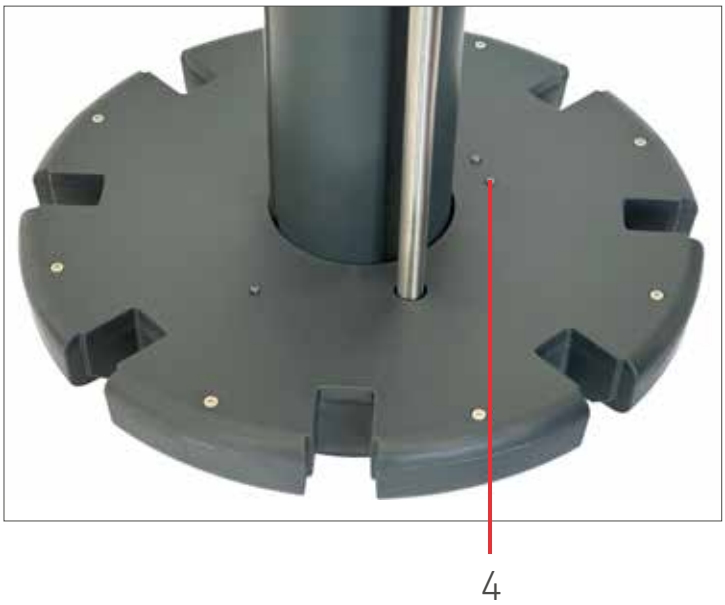

Attention: For reliable operation, please avoid dirt on the remote control. The touch elements should always be clean and grease-free.

Resetting the controller:
Press and hold the Learning Switch until the LED strips flash briefly and light up white again.

Each umbrella must be paired individually

1. Connect the umbrella to the power supply
2. Switch on the remote control (lamp on the remote control lights up blue, difficult to see in daylight) Remote control switches itself on when zone 1 is pressed 2 times
3. Briefly press the respective button to select the zone
4. Press Learning Switch briefly (1 sec)
5. Rotate the color wheel until the color of the LED strips changes

To pair several parasols, repeat the procedure from point 3 onwards (wait 15-20 sec. between the "learning" processes)

We recommend not pairing more than four to six umbrellas per zone (depending on the arrangement). The individual parasols can also be programmed to multiple zones. This is particularly recommended if the umbrellas are far apart.



©Bahama GmbH, Gewerbeparkstr. 34, D-51580 I Reichshof, Germany

PAIRING THE LED SPOTLIGHT (OPTIONAL)



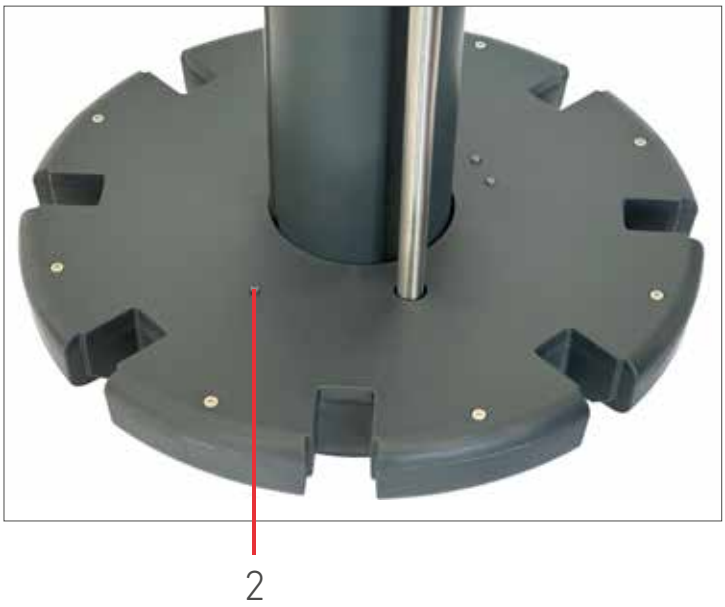

Attention: For reliable operation, please avoid dirt on the remote control. The touch elements should always be clean and grease-free.

Resetting the controller:
Press and hold the Learning Switch until the LED strips flash briefly and light up white again.

Each umbrella must be paired individually

1. Switch on the remote control
2. Press Learning Switch briefly (1 sec)
3. Immediately afterwards, briefly select zone 2 and switch off the remote control

The lighting of the umbrella head should then shut off and is thus programmed.

Attention! The control unit for the spot lighting is not WiFi capable and therefore cannot be controlled via the app



©Bahama GmbH, Gewerbeparkstr. 34, D-51580 I Reichshof, Germany

CONNECTION VIA WIFI APP

General information | Troubleshooting:

- Allow app authorizations
- The WiFi router must have permission for all devices integrated in the WiFi to communicate with each other
- Before carrying out step 15, check that only one room has been selected. If two or more are selected, they cannot be integrated into the home network.
- Before point 15, check whether the device is still connected to the control unit's WiFi
- If there are several umbrellas, connect them to the power supply one after the other for identification.



1. Install the "EasyLighting EasyLife" app
   You can find the apps using the following QR codes:

ANDROID iOS

2. Connect smartphone to the WiFi of the LED controller on the umbrella, SSID: EasyLighting_... Password: 0123456789

3. Open app



4. Tap on "Room" and select room



5. Tap on "Setting"

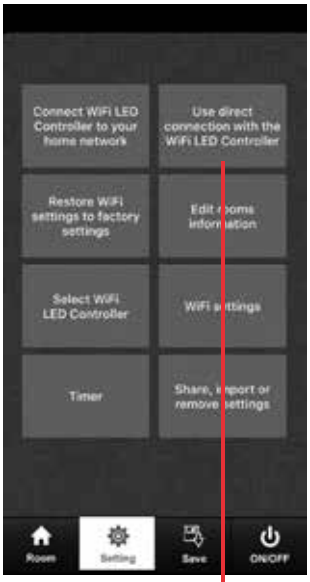

6. Tap on "connection with the WiFi LED Controller"



7. Tap on "Yes



©Bahama GmbH, Gewerbeparkstr. 34, D-51580 I Reichshof, Germany

CONNECTION VIA WIFI APP



8. Tap on "Setting

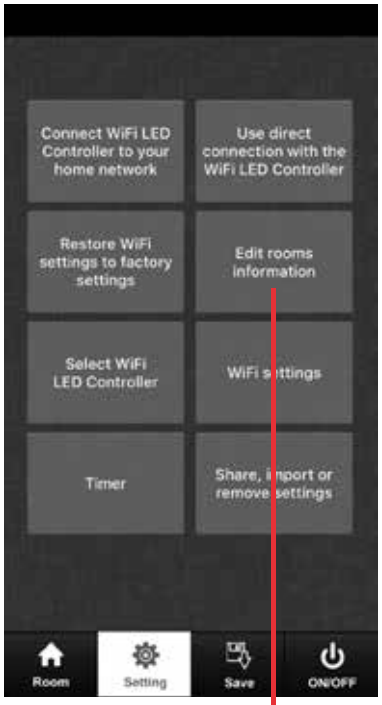

9. Tap on "Edit rooms information"

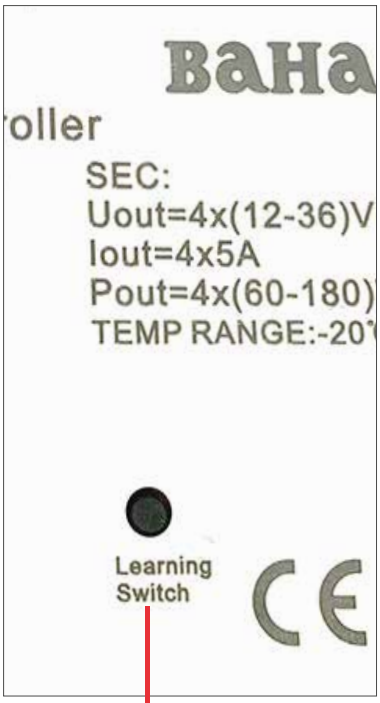

10. On the LED controller of the umbrella press the "Learning Switch"



11. Tap "Learning" in the app (max. 3-5 sec after step 10) -> The umbrella LED Lights start flashing

12. Select a "Room" in the list to which the umbrella is to be programmed. You can later change the names of the rooms (e.g. Jumbrella 1, Jumbrella 2, ...) and add photos to identify each parasol.

©Bahama GmbH, Gewerbeparkstr. 34, D-51580 I Reichshof, Germany

CONNECTION VIA WIFI APP

The LED controller must now be added to your private WiFi.



13. Tap on "Setting"



14. Tap on "Connect WiFi LED Controller to your home network"

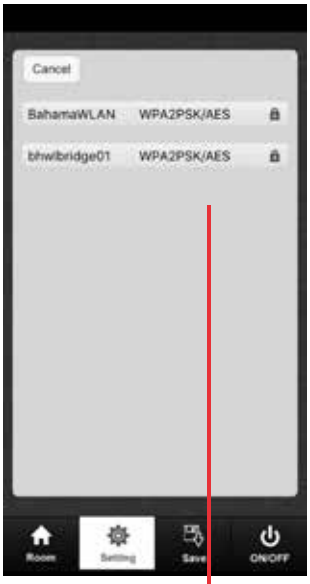



15. Select private WiFi and enter the corresponding password

16. If desired, additional umbrellas can be added to the same room. The procedure also applies to the other rooms.



17.

18.

19.

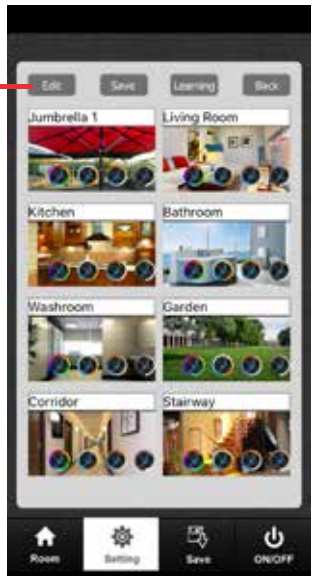

Changing the name and picture of a "room"

17. Tap on "Setting

18. Tap on "Edit rooms information"

19. Tap on "Edit"

20. Tap on the name of the room to customize the name | Tap on the picture of the room to take a picture.



©Bahama GmbH, Gewerbeparkstr. 34, D-51580 I Reichshof, Germany

NOTES



©Bahama GmbH, Gewerbeparkstr. 34, D-51580 I Reichshof, Germany

NOTES



©Bahama GmbH, Gewerbeparkstr. 34, D-51580 I Reichshof, Germany

NOTES



©Bahama GmbH, Gewerbeparkstr. 34, D-51580 I Reichshof, Germany

Bahama®



©Bahama GmbH, Gewerbeparkstr. 34, D-51580 I Reichshof, Germany